REVISIONS			
REV	DESCRIPTION	DATE	APPR
A	1) REDRAWN AND REVISED TO AGREE WITH DETAIL DWG,	5/30/08	

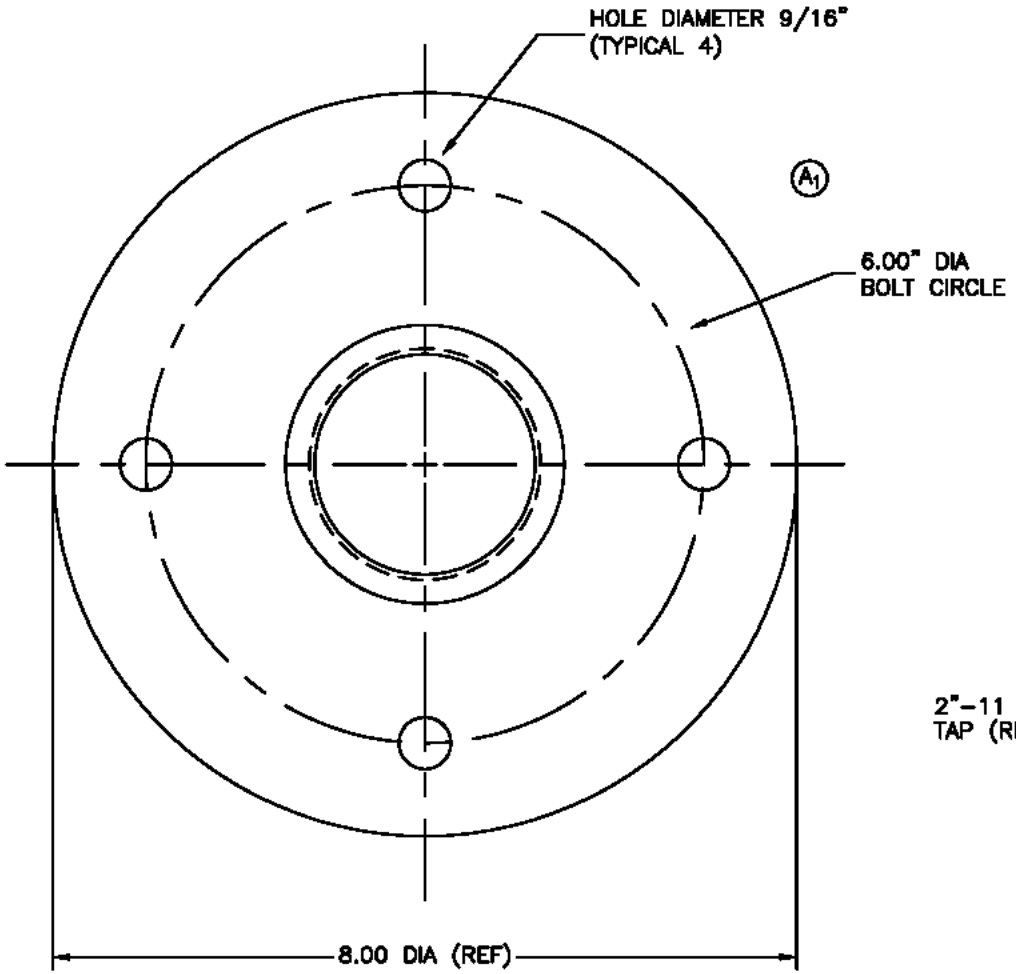

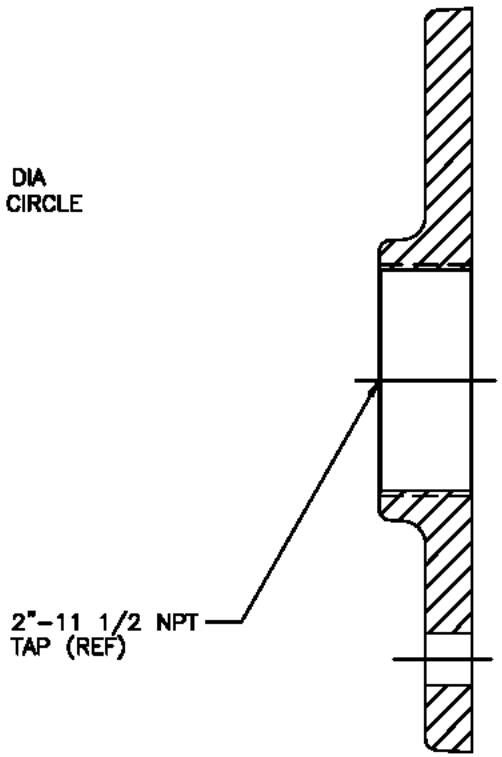

NOTES:

1. MAKE FROM PL10409-2.
2. FINISH: PAINT ORANGE
   #12197 PER FED-STD 595.
3. 1/2" DIAMETER ANCHOR BOLTS (BY OTHERS)
   FOR FLANGE MOUNTING.

TOLERANCES UNLESS OTHERWISE SPECIFIED (inches)			TITLE FLOOR FLANGE, PWC L-806 OPTION -FF			
.X	± 0.06					
.XX	± 0.030					
.XXX	± 0.005					
ANGLES	± 0° 30'					
PROJECT			SIZE C	DRAWING NO. 800189	CATALOG NO. PL10412	REV. A
ENGINEERING						
DRAWN	RJM	11/16/98	SCALE: FULL	FILE: ENGINEERING\PWC\10412		SHEET 1 of 1