Flight Light Inc.
2708 47th Ave.
Sacramento, California, U.S.A.
95822-3806

PH (916) 394-2800 FX (916) 394-2809
TF (800) 806-3548 EM info@flightlight.com

Spare Parts Only

MADE IN USA

15KW through 20KW Constant Current Dry-Type Regulators Low, Medium and High Intensity

Compliance and Applications

FAA Compliant: AC 150/5345-10F

Flight Light's 15KW through 20KW dry-type **saturable reactor network** constant current regulators provide precision control of runway lighting series circuits in low, medium and high intensity applications. Because they use **SOLA/Hevi-Duty's** extremely **reliable design** and **durable magnetic** components, our regulators are not susceptible to extraneous signals that cause competing solid state electronic designs to fail. In fact, our units are tested to assure zero interference with radio communications.

Why Our CCR's are Better

- **Five year limited warranty** - the best warranty in the world.
- Super Efficient Energy Saver: Input current is completely dependent on output load.
- Magnetic components are not susceptible to extraneous signals and do not create interference with radio communications.
- Simple design makes it easy to install and virtually maintenance free.
- Excellent current regulation, no load to full load and with up to 30% lamps inoperative. Output current stable within 0.1 amps at any output.
- Power factor exceeds industry standards: more efficient than required by FAA.
- Automatically compensates for -5% to +10% input voltages.

15KW-20KW Dry-Type Regulator

- Input circuit electronically isolated from output circuit.
- Withstands input overvoltage of 120% nominal for 50 milliseconds within one minute intervals.
- Resumes original brightness mode within 1 second of lost input power.
- Not activated by load switching or transients. Positive open-circuit or overcurrent protection automatically trips regulator off-line within 2 seconds, manually resets in less than 1 second.
- Easy access to remote/local control switch.
- No solid state components in series circuit.

Specifications

- Continuous indoor operation at a temperature range of -40°F to +131°F (-40°C to +55°C).
- Floor mounted, dry-type ventilated enclosure with power components isolated from control functions.
- Integral primary switch.
- Standard 120VAC internally supplied control power for local control.
- Remote control by internal or external sources.
- Direct read output ammeter.
- Output distribution class lightning arrestors.

Formerly SOLA/Hevi-Duty

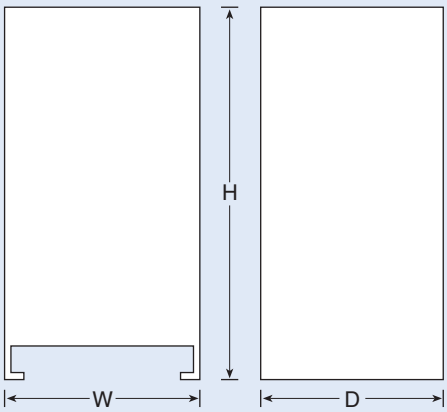

KW	H	W	D	Lb.
15	55.75"	33.25"	27.25"	985
20	55.75"	33.25"	27.25"	1250

Visit our web site: www.flightlight.com

Flight Light Inc.
2708 47th Ave.
Sacramento, California, U.S.A.
95822-3806

PH (916) 394-2800 FX (916) 394-2809
TF (800) 806-3548 EM info@flightlight.com

Spare Parts Only

MADE IN USA

15KW through 20KW Constant Current Dry-Type Regulators Low, Medium and High Intensity

Ordering Code

Qty.	KW Size	FAA #	Code: Volts/Steps/Amps	Control Power	Type	Hertz	Accessory Codes
	15KW = 15 20KW = 20	Std. Reg. = L828 Unit W/Monitor = L829	V/S/A — Code 208/3/6.6 — Z 208/5/6.6 — ZA 220/3/6.6 — N 220/5/6.6 — O 230/3/6.6 — Q 230/5/6.6 — R 240/3/6.6 — A 240/5/6.6 — C 277/3/6.6 — BA 277/5/6.6 — BB 380/3/6.6 — T 380/5/6.6 — U 415/3/6.6 — W 415/5/6.6 — X 480/3/6.6 — H 480/5/6.6 — I	48V Grounded DC Internal — 3 48V Ungrounded DC External — 4 120VAC Int./Ext. — 5 48V Grounded DC Int./Ext. — 6 24V Grounded DC Internal — 7 24V Ungrounded DC External — 8 24V Grounded DC Int./Ext. — 9	Dry = D	60 Hertz = 6 50 Hertz = 5	Elapsed Time Meter* — ETM Input Arrestors — IA Output Volt Meter* — OVM Input Volt Meter* — IVM Input Amp Meter* — IAM Extra Contacts** — EC Outdoor Enclosure — 3R Fixed One Step — FOS Cold Circuit Selector Switch — A * All meters are analog only! ** Specify the contact's function (i.e., output current monitoring).
					D		
					D		

Saturable Reactor Network CCR

The saturable reactor CCR consists of two saturable reactors, main isolation transformer and control circuitry. The AC reactance of the input saturable reactors is automatically adjusted to regulate the load current. It is a magnetic based design.

For technical information and renewal parts call 1-800-806-3548

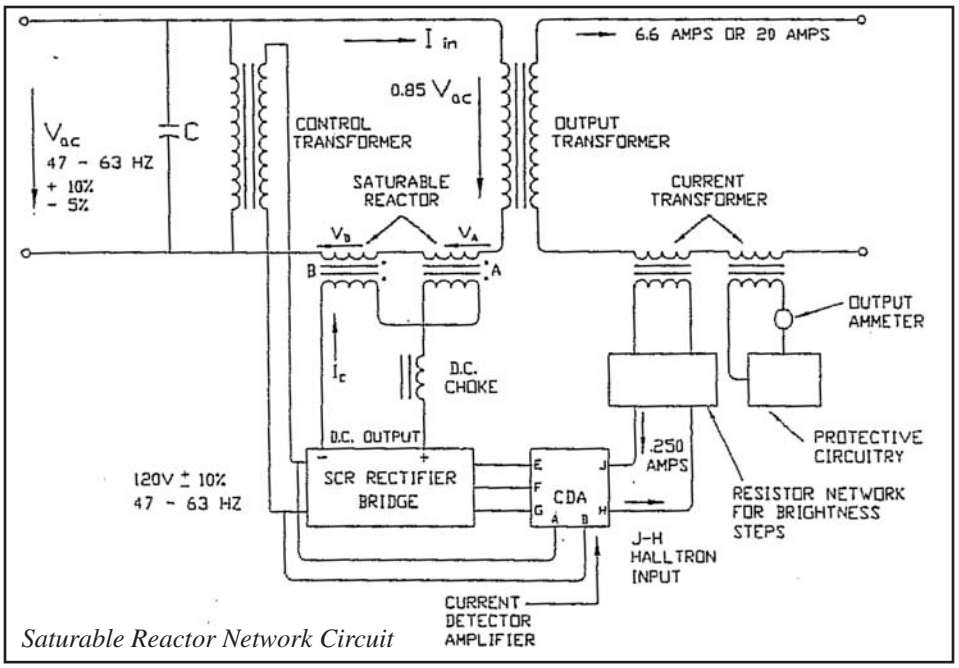

Saturable Reactor Network Circuit

Printed in the U.S.A.

Visit our web site: www.flightlight.com